REBATED & BATHROOM DOOR LOCKS

REBATED DOOR LOCK

BATHROOM DOOR LOCK

The **ERA Rebated Door Lock** is ideally suited for 13mm (1/2") Rebated French Doors.

Available in both brass effect and satin finish, the Rebated Door Lock features a reversible forend and sashbolt allowing fixing to both left or right hinged, inward or outward opening doors.

The 2 Lever Rebated Door Lock is supplied with 2 cut keys.

The **ERA Bathroom Door Lock** has been specially designed for bathroom doors. Available in both brass and satin finish, the Bathroom Lock features a deadbolt which is operated by a thumb turn handle. The latch bolt can be easily reversed, fitting both left or right hinged inward or outward opening doors.

ORDERING DETAILS

Rebated Door Lock

Brass Effect 64mm (2 1/2")	**287-31**
Satin 64mm (2 1/2")	**287-51**
Brass Effect 76mm (3")	**387-31**
Satin 76mm (3")	**387-51**

Bathroom Door Lock

Brass Effect 64mm (2 1/2")	**243-31**
Satin 64mm (2 1/2")	**243-51**
Brass Effect 76mm (3")	**343-31**
Satin 76mm (3")	**343-51**

Rounded forends and keeps available please contact for more information. The above products are also available Clam-Packed.

Rebated Door Lock

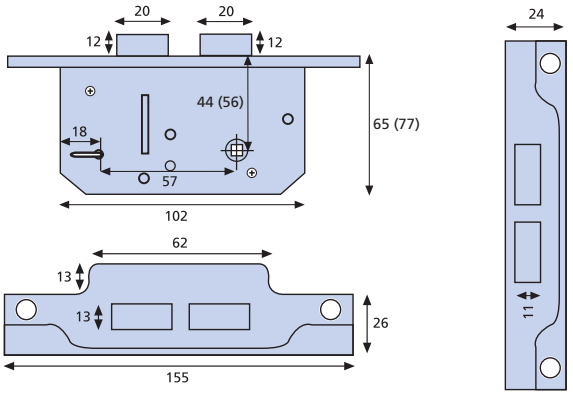

Bathroom Door Lock

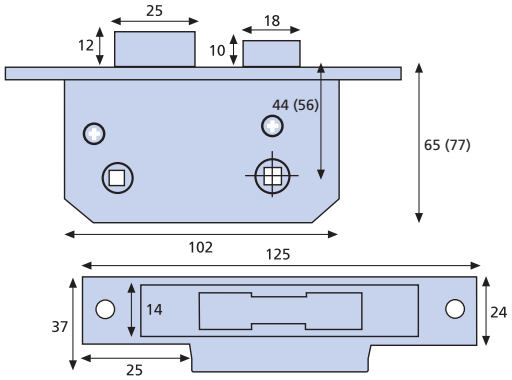

All dimensions in mm. Numbers in brackets relate to 3" version of lock.